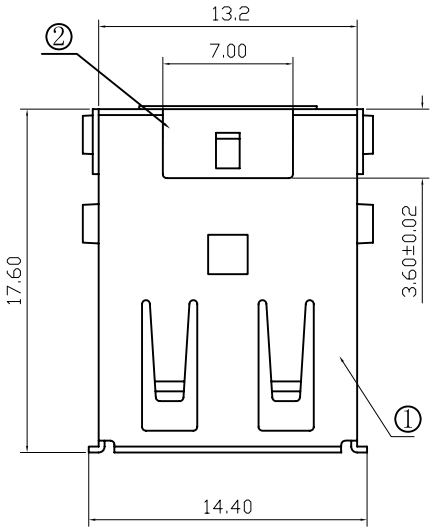

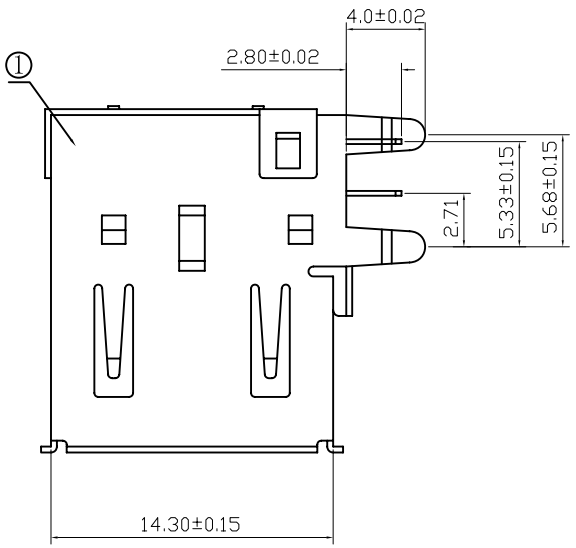

NOTE:

1. SHELL
   MATERIAL:BRASS T=0.30mm
2. COVER
   MATERIAL:SPCC T=0.30mm
3. HOUSING
   MATERIAL:P.B.T + GF30%
4. CONTACT
   MATERIAL:PHOS BRONZE T=0.25mm
   PLATING: GOLD/TIN PLATED
   DIMENSIONDS MARKED "▲" TO
   CHECKED BY Q.C & IPQC

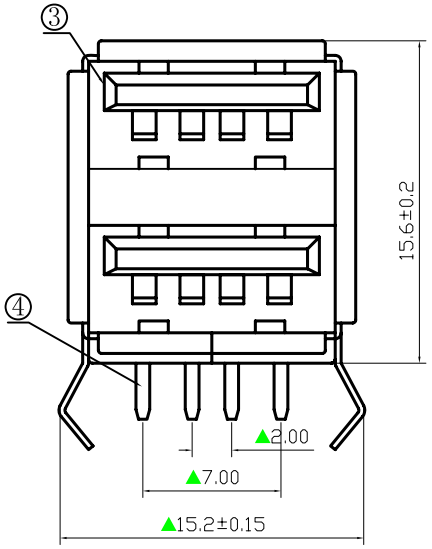

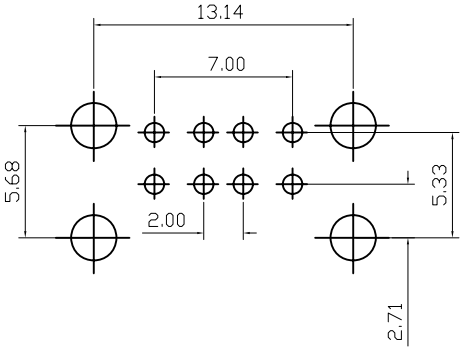

P.C.B LAYOUT

LTR	REVISION RECORD	ECN	DWN	CHK	DATE
A	FIRST RELEASED	GMT200608-146	Doris Tsai		06/08/11

TOLERANCES UNLESS OTHERWISE SPECIFIED:
0 PLC ±0
1 PLC ±0.30
2 PLC ±0.20
3 PLC ±0.10
ANGLES ±3°

MATERIAL: SEE NOTE

FINISH: SEE NOTE

DWN: Doris.Tsai 11-AUG-2006
CHK: Jacky.Lin 11-AUG-2006
APVD: Kevin.Ke 11-AUG-2006
WEIGHT: -- GRAM
PRODUCT SPEC: SEE NOTE

GMT GLOBEMASTER TECHNOLOGIES CO.,LTD.

NAME: USB A/F 雙層90度無彈片

LOC: DW | SIZE: A3 | DRAWING NO: C-800074
SCALE: 1:1 | SHEET: 1 OF 1 | REV: A

CUSTOMER DRAWING

NUMBER C-800074
3RD ANGLE PROJECTION
METRIC
UNIT:mm